LAPPSET®

FINNO

Q12420-1

3

DATE: 25.7.2018

701401–602	PCS	702286	PCS	705369–704	PCS	705423	PCS	705505–217	PCS	706439–602	PCS
	6		1		2		1		2		3
L 1250		65x65								L 704	
706453	PCS	706484–602	PCS	706510–602	PCS	706514–602	PCS	706531	PCS	706538	PCS
	2		4		4		2		11		4
15x145x600		93x93x2150		45x120x1030		70x120x1504					
706735–305	PCS	706742	PCS	706766–703	PCS	706778	PCS	707209–703	PCS	707305–703	PCS
	3		3		1		1		1		1
								10x640x702			
707331–602	PCS	707386–703	PCS	707450	PCS	707585	PCS	900240	PCS	903093	PCS
	1		1		2		1		8		20
93x93x470		10x640x702						Ø8x70		Ø8x90	
905138	PCS	905196	PCS	907694–216	PCS	908255–217	PCS	908257–217	PCS	909256	PCS
	10		10		2		1		1		44
GRAY		GRAY		L 704		2304x222x60		2304x660x60		Ø16/8.4x1.6	
909506	PCS	909511	PCS	909519	PCS	980123	PCS	980128	PCS	980131	PCS
	4		11		11		40		12		40
Ø3.5x13		90x90x650		50x380x380		Ø7x60		Ø7x40		Ø6x60	
P10478–611	PCS		PCS		PCS		PCS		PCS		PCS
	1										
70x120x2280											

Copyright Lappset Group Ltd

LAPPSET®
FINNO

Q12420-1

DATE: 11.12.2017

EN/AS Impact Area 37.5 m2

Falling Space 40.5 m2

Max Falling Height 520 mm

1:50

0 2

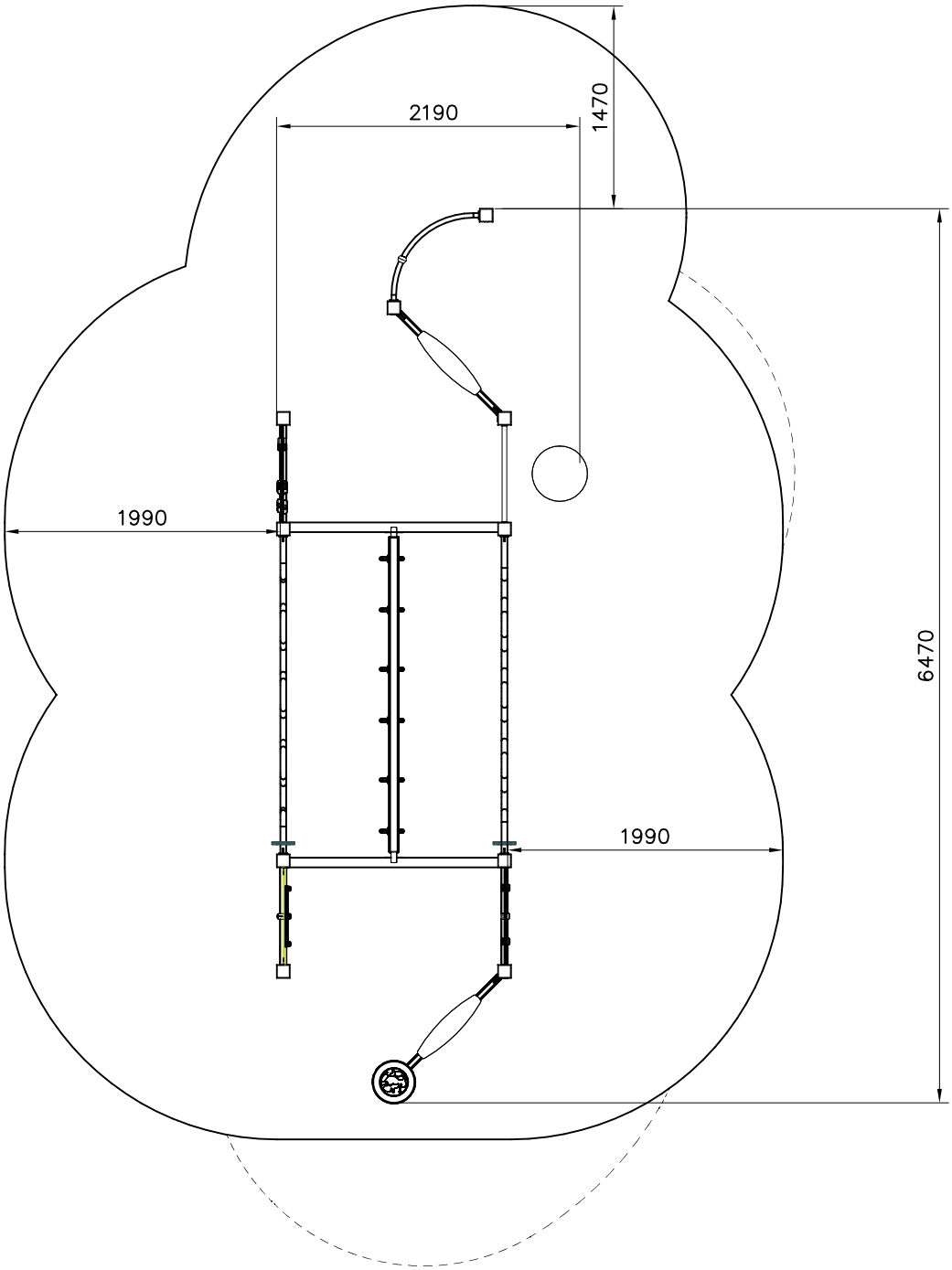

Copyright Lappset Group Ltd

LAPPSET®
FINNO

Q12420-1

DATE: 11.12.2017

5A

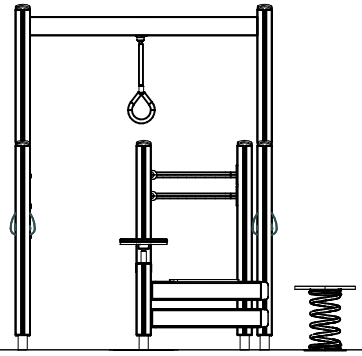

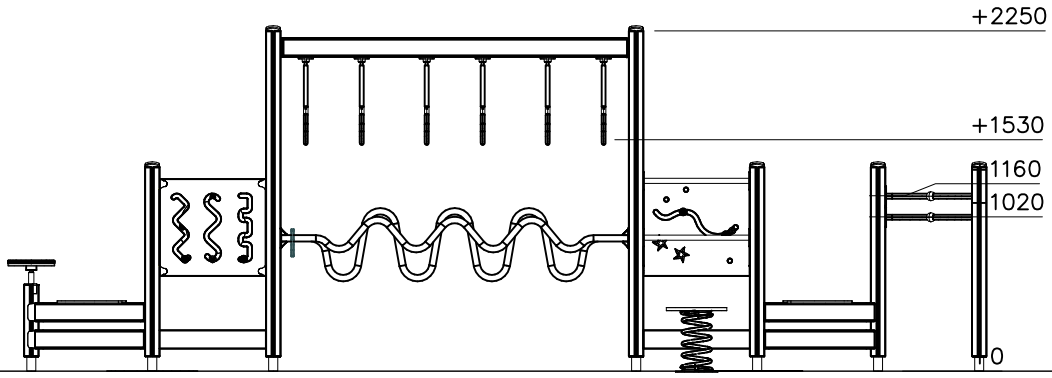

Copyright Lappset Group Ltd

LAPPSET®

FINNO

Q12420-1

DATE: 11.12.2017

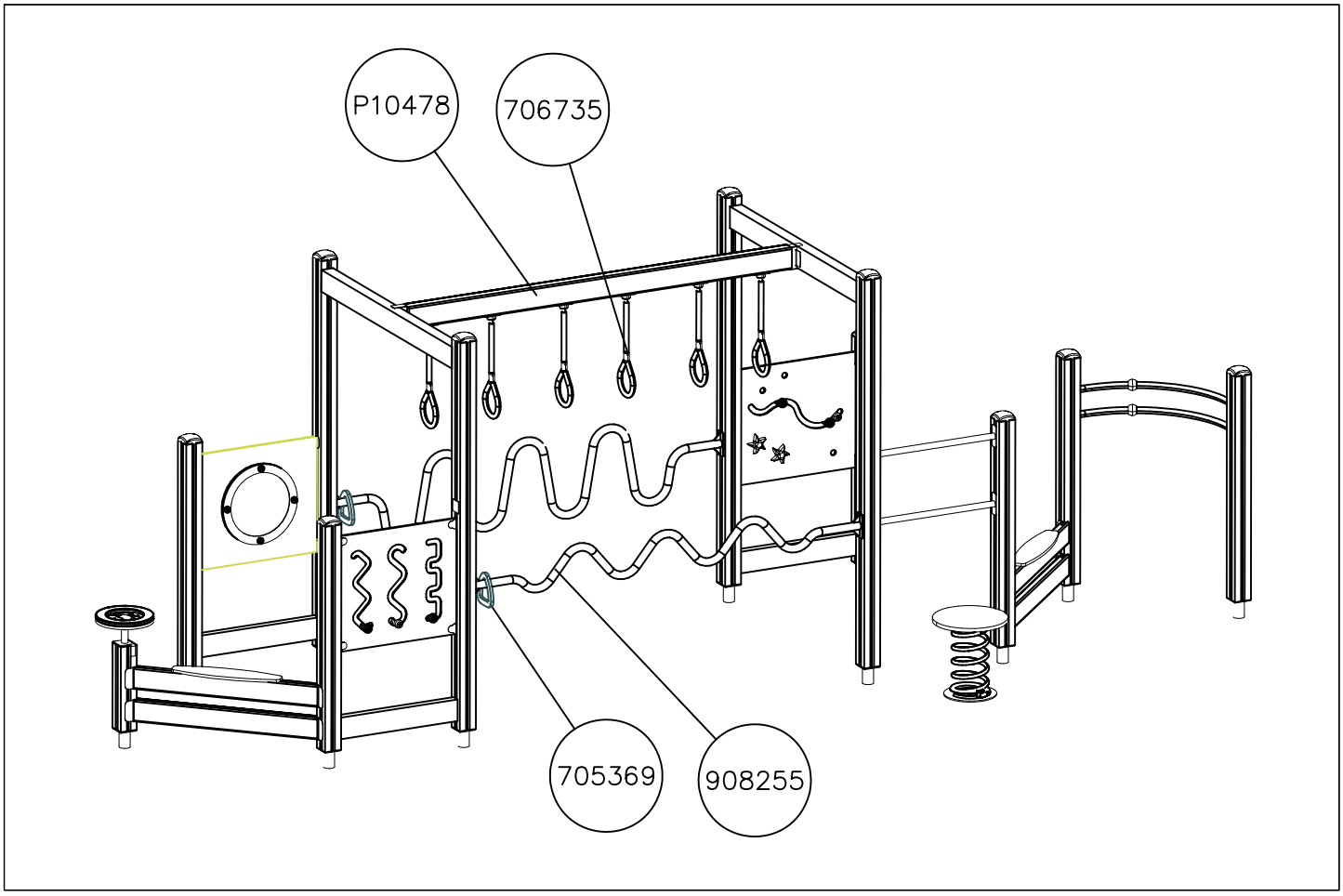

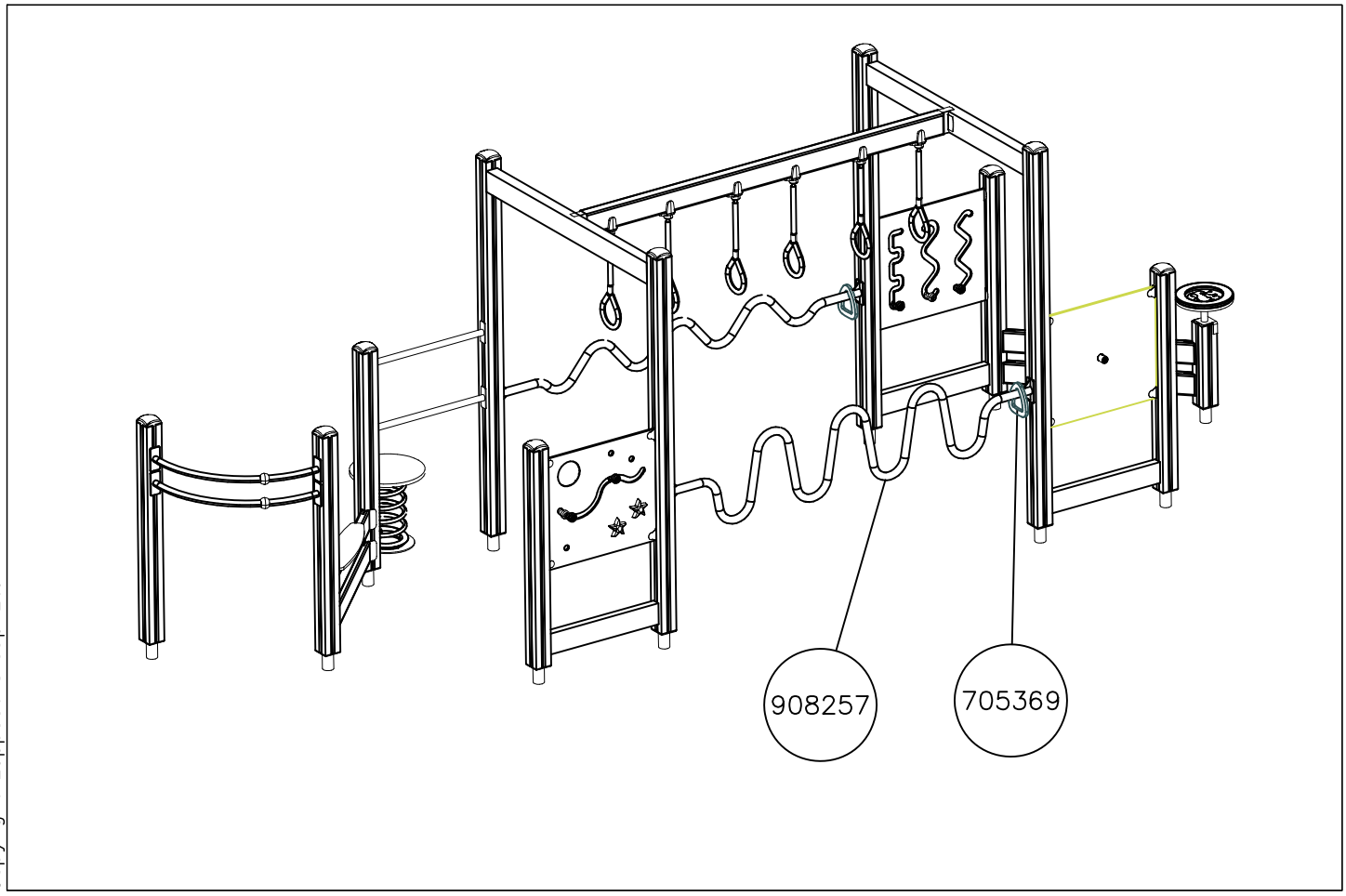

Copyright Lappset Group Ltd